B003B3952M

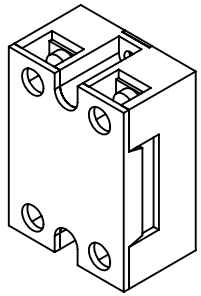

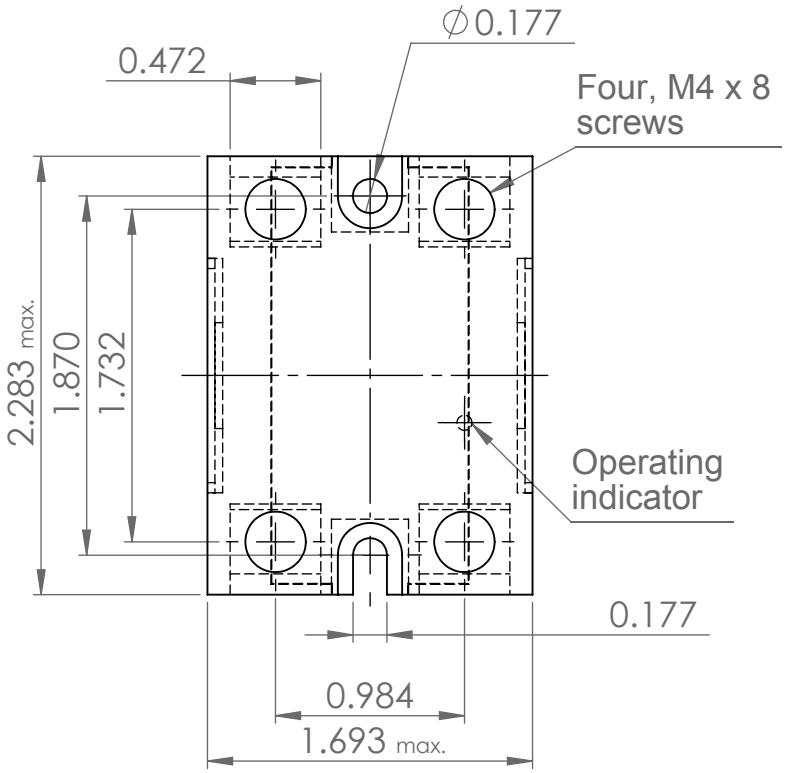

FRONT

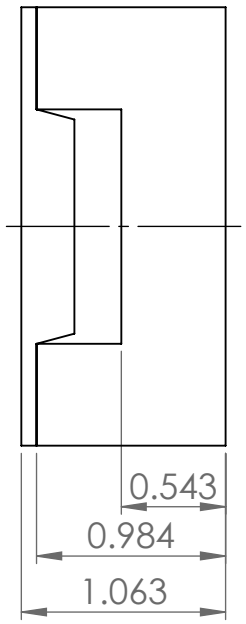

SIDE

ITEM NAME:

Omron G3NA-205B-DC5-24 Solid State Relay, Zero Cross Function, Yellow Indicator, Photocoupler Isolation, 5 A Rated Load Current, 24 to 240 VAC Rated Load Voltage, 5 to 24 VDC Input Voltage

ASIN :

B003B3952M

MATERIAL :

-

BRAND :

Omron

UNLESS OTHERWISE SPECIFIED DIMENSIONS ARE IN INCHES

INFORMATION IN THIS DRAWING IS PROVIDED FOR REFERENCE ONLY

http://www.amazonsupply.com
Amazon Supply, An Amazon Company

amazon supply