B003DZ0SG0

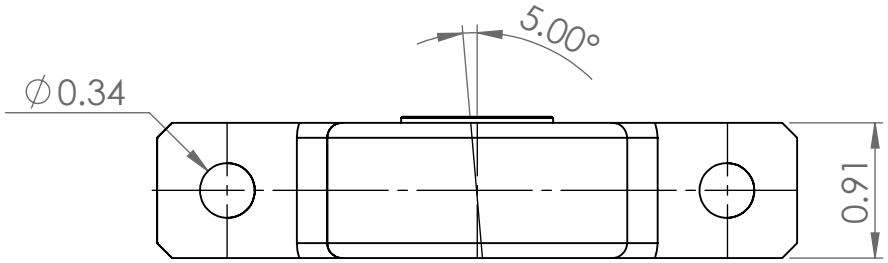

TOP

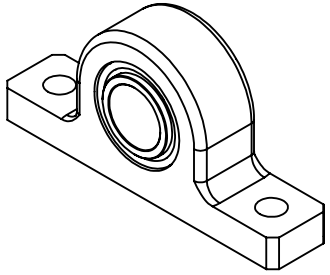

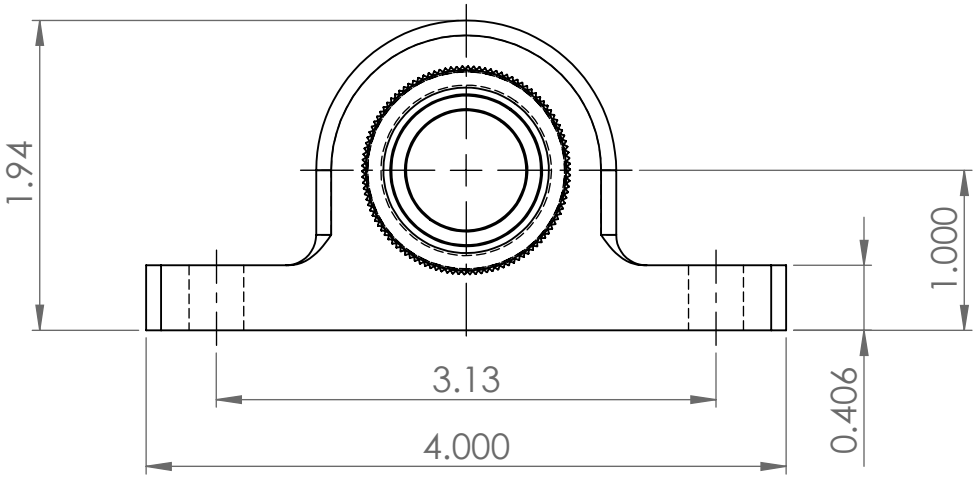

FRONT

ITEM NAME: Spyraflo PB3-750-B SAE-840 Oil Impregnated Bronze Bearing Pillow Block, 2 Bolt Holes, 0.750" Bore Diameter, Aluminum, Inch	ASIN : B003DZ0SG0	MATERIAL : SAE-840 Bronze in an aluminum housing	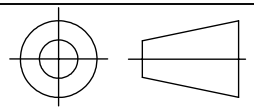
	BRAND : Spyraflo	# UNLESS OTHERWISE SPECIFIED DIMENSIONS ARE IN INCHES # INFORMATION IN THIS DRAWING IS PROVIDED FOR REFERENCE ONLY	http://www.amazonsupply.com Amazon Supply, An Amazon Company amazon supply