B006M6ZBAK

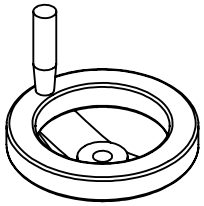

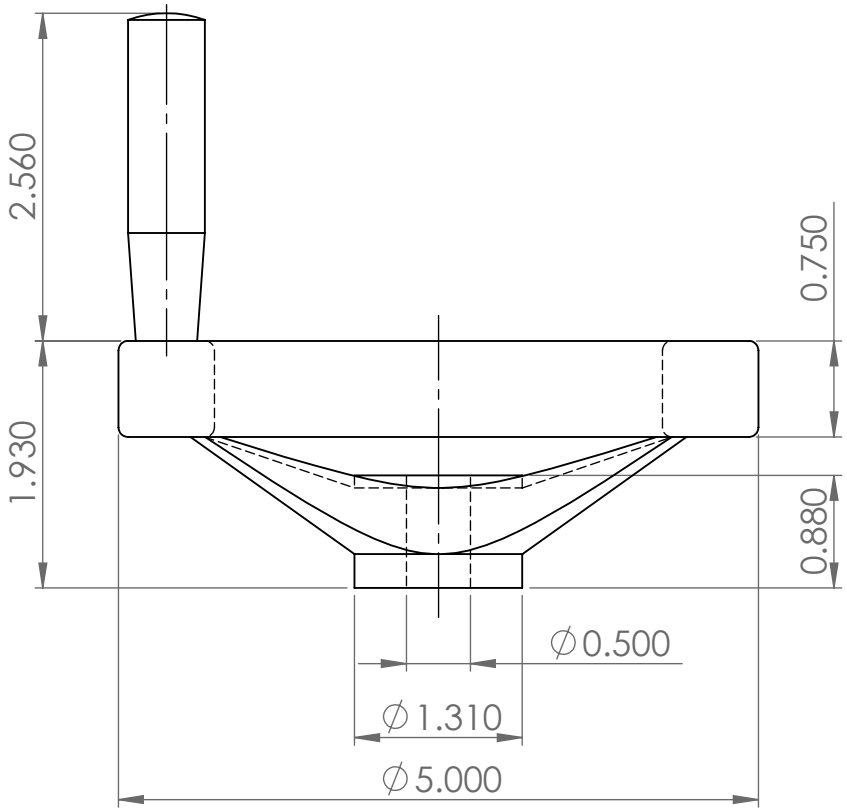

FRONT

ITEM NAME:

2 Spoked Black Powder Coated Aluminum Dished Hand Wheel with Revolving Handle, 5" Diameter, 1/2" Hole Diameter (Pack of 1)

ASIN :

B006M6ZBAK

MATERIAL :

Aluminum

BRAND :

Monroe Engineering

UNLESS OTHERWISE SPECIFIED DIMENSIONS ARE IN INCHES

INFORMATION IN THIS DRAWING IS PROVIDED FOR REFERENCE ONLY

http://www.amazonsupply.com

Amazon Supply, An Amazon Company

amazon supply