B003GSLGRO

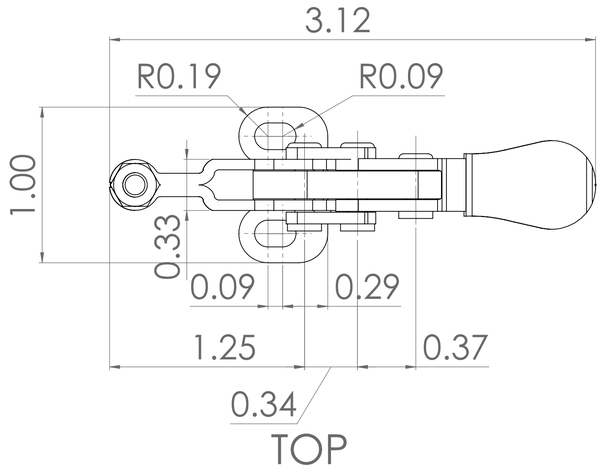

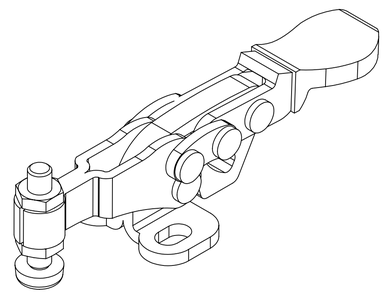

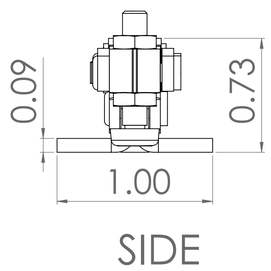

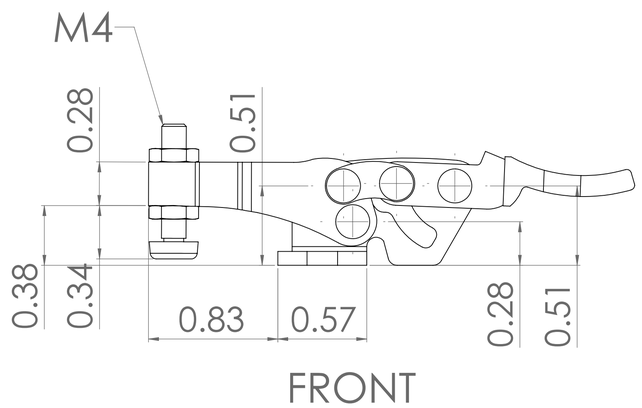

ITEM NAME:	ASIN :	MATERIAL :	
DE-STA-CO 2005-S HORIZONTAL HANDLE HOLD DOWN ACTION CLAMP	B003GSLGRO	STEEL	
	BRAND : DE-STA-CO	# UNLESS OTHERWISE SPECIFIED DIMENSIONS ARE IN INCHES # INFORMATION IN THIS DRAWING IS PROVIDED FOR REFERENCE ONLY	http://www.amazonsupply.com Amazon Supply, An Amazon Company amazonsupply