B009EAXNCE

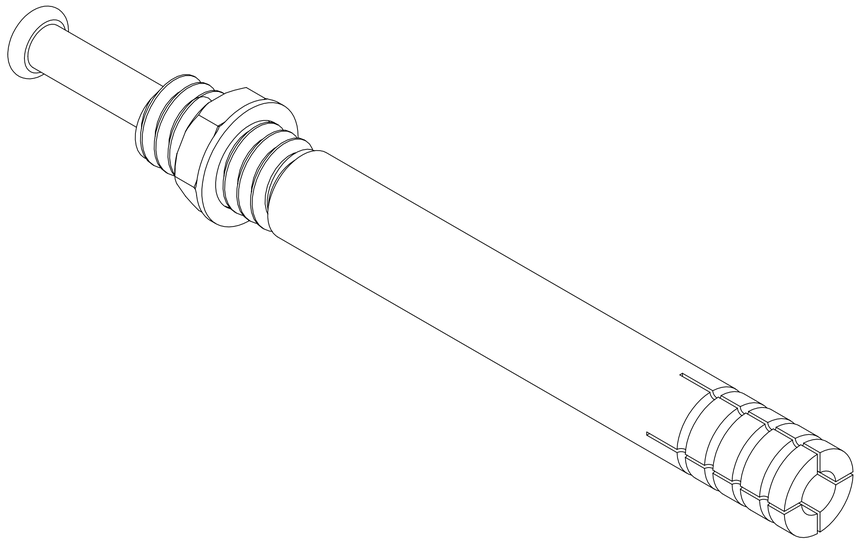

ISO

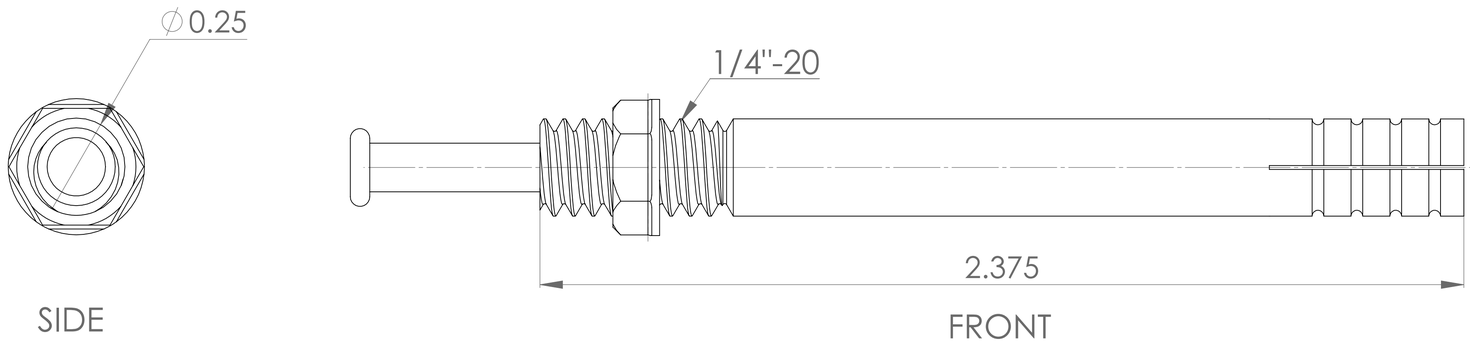

ITEM NAME:
WEJ-IT CP PIN DRIVE ANCHOR, STEEL, ZINC YELLOW CHROMATE PLATED FINISH, MEETS QQZ 325Z/GSA FFS-325, 1/4" DIAMETER, 2-3/8" LENGTH, 1/4"-20 THREADS (PACK OF 100)

ASIN :
B009EAXNCE

MATERIAL :
STEEL

BRAND :
SMALL PARTS

UNLESS OTHERWISE SPECIFIED DIMENSIONS ARE IN INCHES

INFORMATION IN THIS DRAWING IS PROVIDED FOR REFERENCE ONLY

http://www.amazonsupply.com

amazonsupply